SKB 30

Power Bridge Rectifiers

SKB 30

Features

- Isolated metal case with screw terminals
- Blocking voltage up to 1600 V
- High surge current
- Easy chassis mounting
- UL recognized, file no. E 63 532

Typical Applications

- Single phase rectifiers for power supplies
- Input rectifiers for variable frequency drives
- Rectifiers for DC motor field supplies
- Battery charger rectifiers
- Recommended snubber network: RC: 0.1 µF, 50 Ω (P_R = 1 W)

[1] Freely suspended or mounted on an insulator
[2] Mounted on a painted metal sheet of min. 250 x 250 x 1 mm

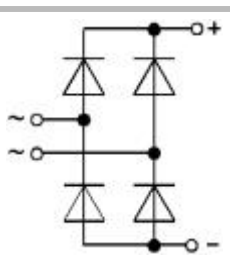

SKB

V_{RSM}, V_{RRM} V	V_{VRMS} V	I_D = 30 A (T_c = 94 °C) Types
200		SKB 30/02A1
400		SKB 30/04A1
800		SKB 30/08A1
1200		SKB 30/12A1
1400		SKB 30/14A1
1600		SKB 30/16A1

Symbol	Conditions
I_D	T_a = 45 °C, isolated[1]
	T_a = 45 °C, chassis[2]
I_{DCL}	T_a = 45 °C, isolated[1]
	T_a = 45 °C, chassis[2]
	T_a = °C,
I_{FSM}	T_{vj} = 25 °C, 10 ms
	T_{vj} = 150 °C, 10 ms
i²t	T_{vj} = 25 °C, 8,3 ... 10 ms
	T_{vj} = 150 °C, 8,3 ... 10 ms
V_F	T_{vj} = 25°C, I_F = 150 A
$V_{(TO)}$	T_{vj} = 150°C
r_T	T_{vj} = 150°C
I_{RD}	T_{vj} = 25°C, V_{RD}=V_{RRM}
	T_{vj} = °C, V_{RD}=V_{RRM} ≥ V
I_{RD}	T_{vj} = 150°C, V_{RD}=V_{RRM}
	T_{vj} = °C, V_{RD}=V_{RRM} ≥ V
t_{rr}	T_{vj} = 25°C
f_G	
$R_{th(j-a)}$	isolated[1]
	chassis[2]
$R_{th(j-c)}$	total
$R_{th(c-s)}$	total
T_{vj}	
T_{stg}	
V_{isol}	a. c. 50 ... 60 Hz; r.m.s.; 1 s / 1 min.
M_s	to heatsink
M_t	to terminals
a	
w	
Fu	
Case	

Cases / Circuits

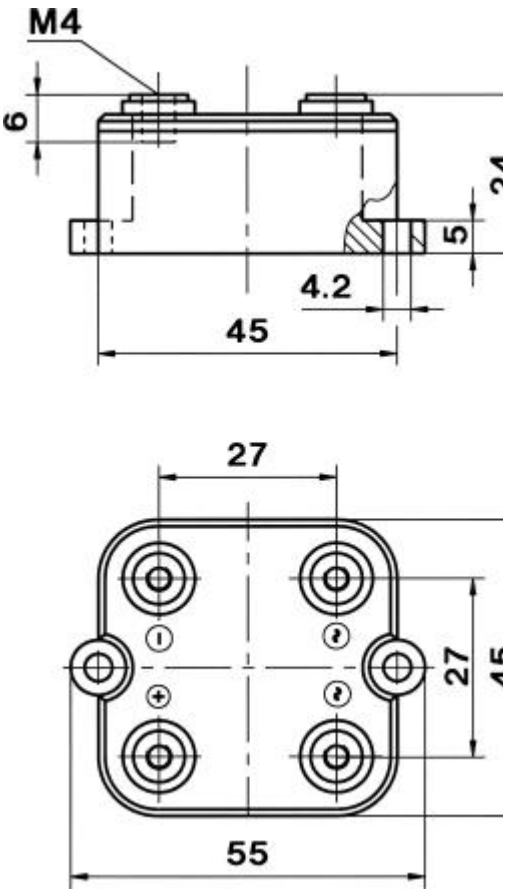

Case G 12

Diagrams

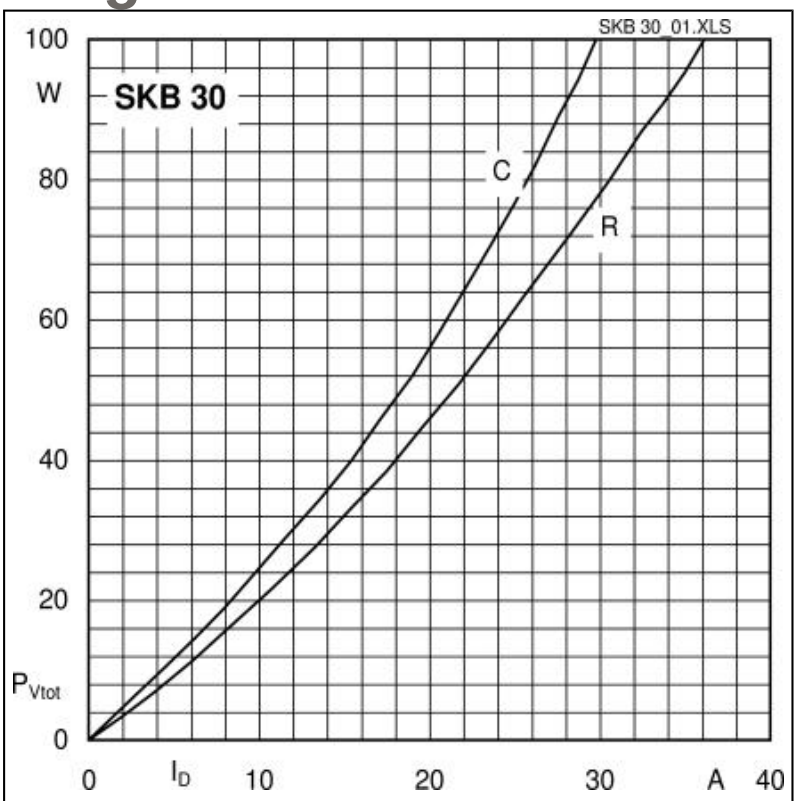

Fig. 3L Power dissipation vs. output current

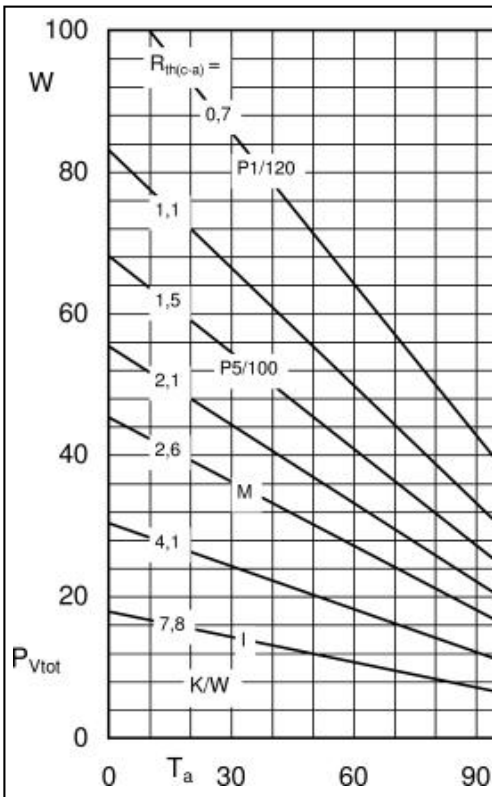

Fig. 3R Power dissipation vs. case temperatu

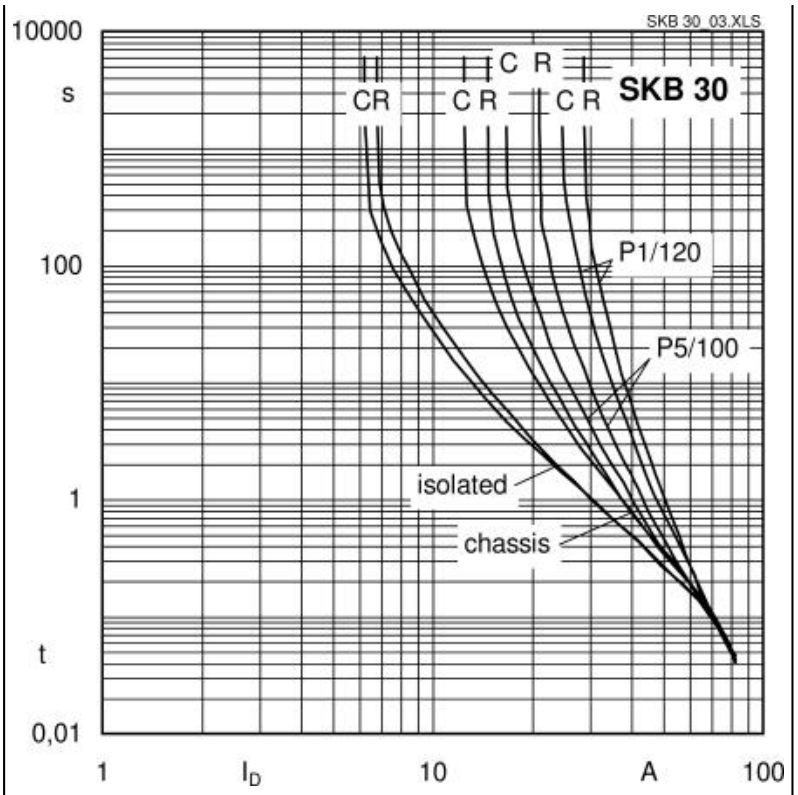

Fig. 6 Rated overload characteristics vs. time